Identifying the triangle singularity at STCF via $e^+e^- \to \overline{p}(N^* \to N\pi)$ process

Qi Huang

UCAS

Based on the work in progress

Together with Jia-Jun Wu

2019-09-16, Hefei

Content

- Introduction
- Proposal
- Pre-Calculation
- Prospects
- Summary

A brief history of triangle singularity (TS)

L. D. Landau, Nucl. Phys. 13, 181-192 (1959) ⇒ Concept

BESIII, Phys. Rev. Lett., 108, 182001 (2012):

- Observation of isospin breaking process $\eta(1405) \to \pi^0 f_0(980)$.
  - Explained in terms of the $K\bar{K}K^*$ triangle singularity:
    - J.-J. Wu, et.al., Phys. Rev. Lett., 108, 081803 (2012),
      F. Aceti, et.al., Phys. Rev. D86, 114007 (2012),
      X.-G. Wu, et.al., Phys. Rev. D87, 014023 (2013),
      .....

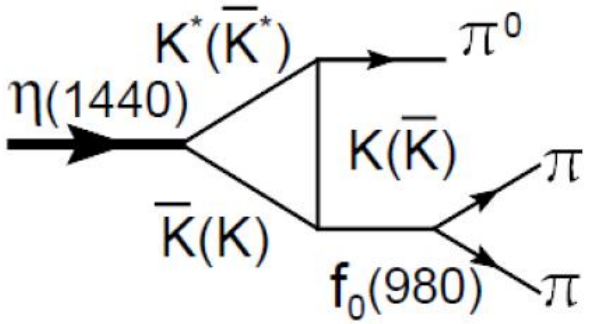

Interpretation of exotic states:

A. P. Szczepaniak, Phys. Lett. B747, 410 (2015), $Z_c(3900)$ as $D_1\bar{D}^*D$ TS,

- F.-K. Guo, et.al., Phys. Rev. D92, 071502 (2015), $\mathrm{P}_c(4450)$ as $\Lambda^*\chi_{c1}p$ TS,

.....

.....

Recent works related to TS

N. N. Achasov, et.al., Phys. Rev. D92, 036003 (2015);

M. Mikhasenko, B. Ketzer and A. Sarantsev, Phys. Rev. D91, 094015 (2015);

X.-H. Liu, M. Oka and Q. Zhao, Phys. Lett. B753, 297 (2016);

X.-H. Liu, Q. Wang and Q. Zhao, Phys. Lett. B757, 231 (2016);

A. E. Bondar and M. B. Voloshin, Phys. Rev. D93, 094008 (2016);

X.-H. Liu and U. G. Meissner, Eur. Phys. J. C77, 816 (2017);

J.-J. Xie and F.-K. Guo, Phys. Lett. B774, 108 (2017);

S. Sakai, E. Osetand A. Ramos, Eur. Phys. J. A54, 10 (2018);

Q.-R. Gong, J.-L. Pang, Y.-F. Wang and H.-Q. Zheng, Eur. Phys. J. C78, 276 (2018);

Z. Cao and Q. Zhao, Phys. Rev. D99, 014016 (2019);

F.-K. Guo, Phys. Rev. Lett. 122, 202002 (2019);

A series of works in which E. Oset participated ⋯⋯

What is TS ?

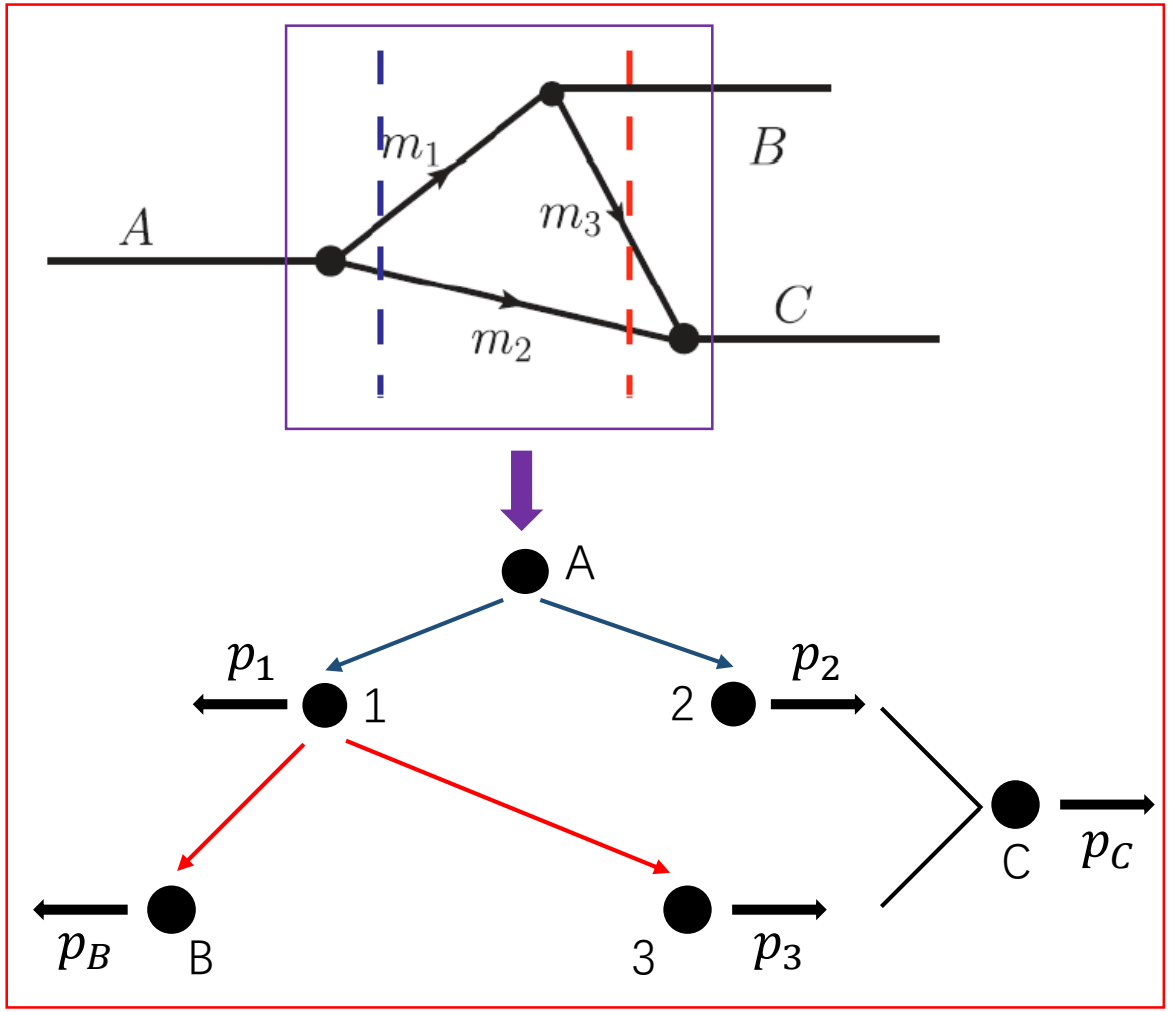

How the TS happens:

(1). Particle 1, 2 and 3 are all real particles,

(2). $\vec{p}_2$ and $\vec{p}_3$ have same direction,

(3). Particle 3 can catch up particle 2 $\Rightarrow v_3 > v_2$.

Coleman-Norton Theorem

Purely kinematical effect !

A detailed derivation of TS can be found in:
M. Bayar, F. Aceti, F.-K. Guo and E. Oset, Phys. Rev. D94, 074039 (2016).

Problems with detection of TS

Threshold will affect

TS and threshold - close

Example:

$Z_c(3900) - \bar{D}D^*$ threshold ~ 25 MeV
P_c~4.45 $GeV - \chi_{c1}p$ threshold ~ O(10) MeV
$a_1(1420) - \bar{K}K^*$ threshold ~ 40 MeV

X.-H. Liu, M. Oka and Q. Zhao, Phys. Lett. B753, 297 (2016):

If a threshold enhancement falls into the TS kinematic region, distinguishing it from TS will be complicated.

Detectable TS shall be far from threshold enhancement
⇒ **Kinematical region of TS shall be large**

A sufficient and unnecessary condition

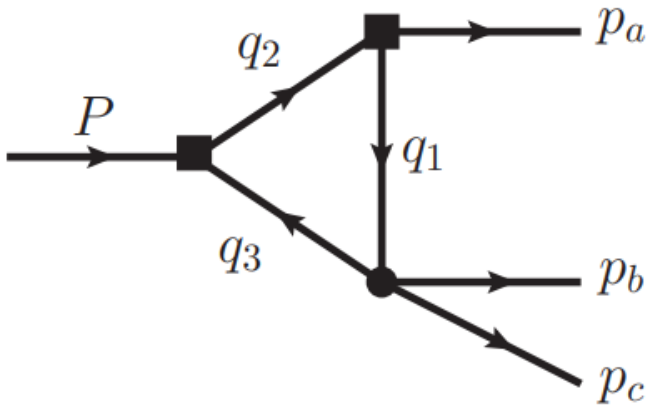

$$\Delta_{s_1}^{\max} = \sqrt{s_{1C}} - \sqrt{s_{1N}} \approx \frac{m_3}{2m_1(m_2+m_3)}[(m_2-m_1)^2 - s_3],$$
$$\Delta_{s_2}^{\max} = \sqrt{s_{2C}} - \sqrt{s_{2N}} \approx \frac{m_3}{2m_2(m_1+m_3)}[(m_2-m_1)^2 - s_3].$$

$Z_c(3900)$: $\Delta_1 = 16\ MeV, \Delta_2 = 15\ MeV$ ➡ Small
P_c~4.45 GeV: Δ_1~200 MeV, Δ_2~100 MeV

Energy is important
↳ Determining the velocity (TS)

Width of internal particles will affect

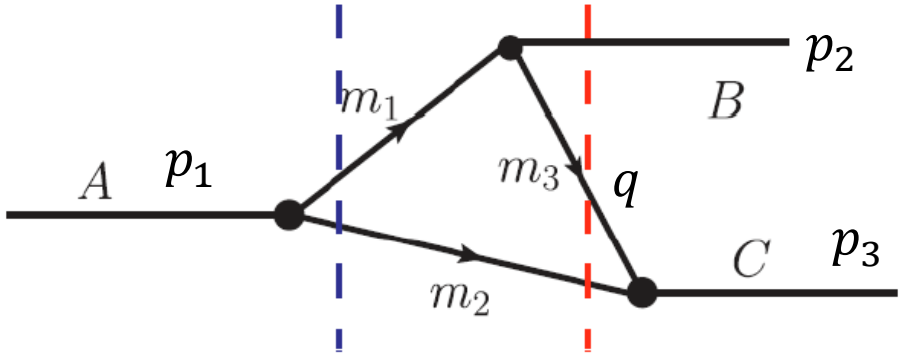

$$M_{toy} = i\int \frac{d^4q}{(2\pi)^4} \frac{1}{((p_2+q)^2-m_1^2+i\epsilon)} \frac{1}{((p_3-q)^2-m_2^2+i\epsilon)} \frac{1}{(q^2-m_3^2+i\epsilon)}$$

$$M'_{toy} = i\int \frac{d^4q}{(2\pi)^4} \frac{1}{((p_2+q)^2-m_1^2+im_1\Gamma_1)} \frac{1}{((p_3-q)^2-m_2^2+im_2\Gamma_2)} \frac{1}{(q^2-m_3^2+im_3\Gamma_3)}$$

N. N. Achasov, et.al., Phys. Rev. D92, 036003 (2015)

$\eta(1405) \to \pi^0 f_0(980) \to 3\pi$

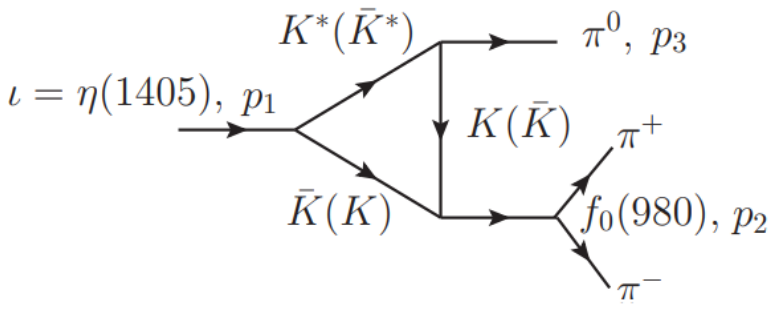

Considering the width of K^*

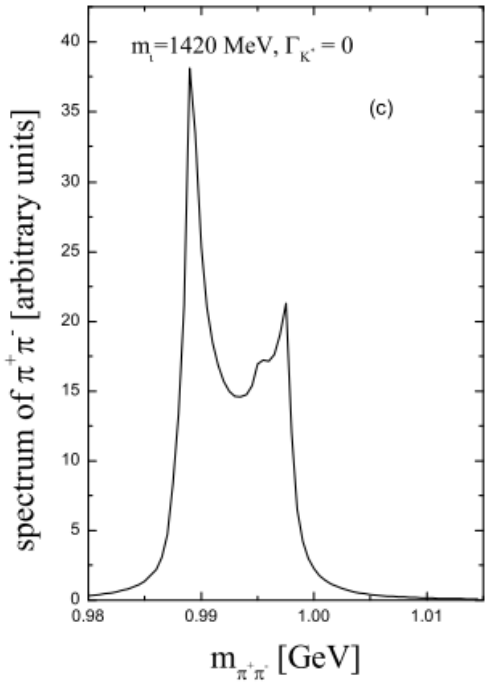

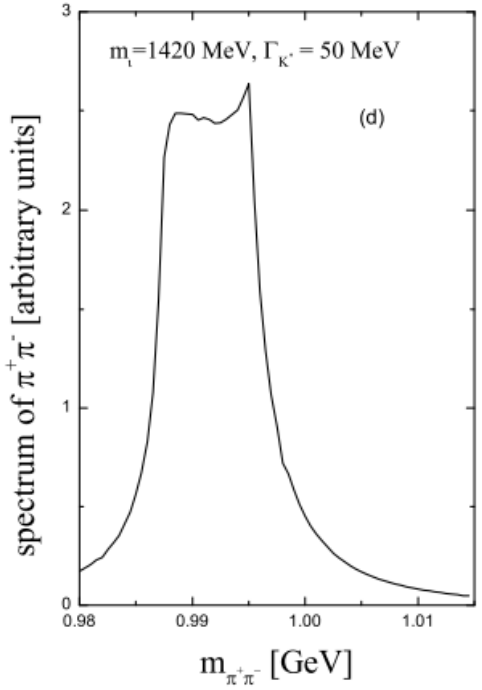

Width of particles:

(1). Lowering the height

(2). Increase the width

(1). Undetectable?

(2). Breit-wigner? TS?

A preliminary proposal

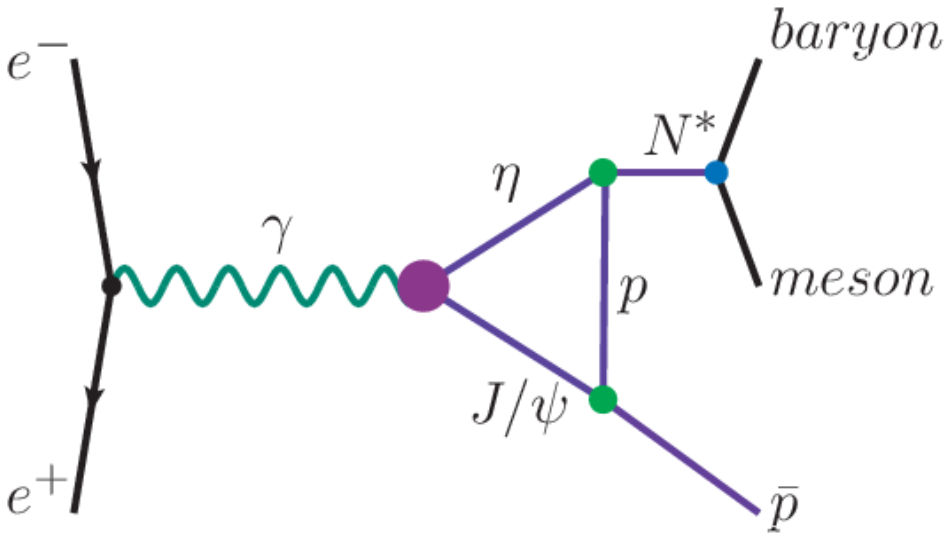

$$\text{PDG} \Rightarrow \begin{cases} m_\eta \sim 0.548\ GeV, \Gamma_\eta = 1.31\ keV \\ m_p \sim 0.938\ GeV, \Gamma_p \sim 0\ \text{keV} \\ m_{J/\psi} \sim 3.1\ GeV, \Gamma_{J/\psi} = 92.9\ keV \end{cases}$$

Sharp!

$\sigma[e^+e^- \to J/\psi\eta]$ ~ pb (order of magnitude)

PDG: $Br[J/\psi \to p\bar{p}] = (2.121 \pm 0.029) \times 10^{-3}$

$\Rightarrow \sigma$ ~ fb (order of magnitude)

Luminosity : BESIII: $10^{33} cm^{-2} s^{-1}$ STCF: $10^{35} cm^{-2} s^{-1}$

Data Sets

BESIII started data taking for physics since 2009, and the following data samples were collected:

- 2010 + 2011 : 2.9 fb^{-1} psi(3770) at 3.773 GeV
- 2011 : 0.5 fb^{-1} psi(4040) at 4.009 GeV, 0.024 fb^{-1} tau mass scan at around 3.554 GeV, 2011
- 2012 : 1.3x10^9 J/psi at Ecm=3.097 GeV, 2009 (0.225x10^9) , 0.5x10^9 psi(3686) at Ecm=3.686 GeV, 2009 (0.106x10^9)
- 2013 : 1.9 fb^{-1} Y(4260) at 4.23 and 4.26 GeV, 0.5 fb^{-1} Y(4360) at 4.36 GeV, 0.5 fb^{-1} Y(4260) and Y(4360) scan
- 2014 : 0.8 fb^{-1} R scan, 10^4 energy points between 3.85 and 4.59 GeV, 0.5 fb^{-1} at 4.60 GeV, 0.1 fb^{-1} at 4.47 and 4.53 GeV for line shape, 0.04 fb^{-1} around the threshold of Lambda charm, 1.0 fb^{-1} at 4.42 GeV
- 2015 : 0.5 fb^{-1} data for R scan from 2.0 to 3.08 GeV, 0.1 fb^{-1} data @ 2.125 GeV
- 2016 : 3.1 fb^{-1} data at 4.18 GeV
- 2017 : 3.8 fb^{-1} 8 energy points from 4190~4280 MeV, 0.46 fb^{-1} around chi_c1 mass , 0.22 fb^{-1} around 3872 MeV
- 2018 : 4.6 x 10^9 J/psi data set (1.4 /fb), 0.13 /fb tau scan data, 0.5 /fb, 9 points for psi(3686) scan data

BESIII: $O(1) fb^{-1} \cdot y^{-1}$ ➡ STCF: $O(100) fb^{-1} \cdot y^{-1}$

Detectable in STCF!

Supplements on the proposal

(1)

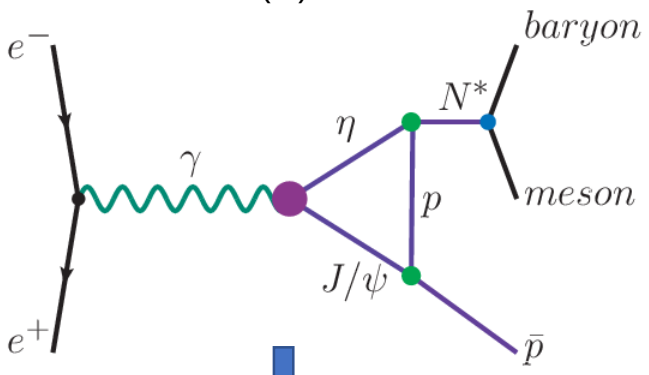

$baryon \to p, meson \to \pi$

$$e^+e^- \to p\bar{p}\pi$$

pb (guess) ⇒ **large background**

Very high statistic ⇒ **STCF helps**

(2)

$\Delta_1 = 302.7\ MeV, \Delta_2 = 224.9\ MeV$

$\sqrt{s}$ and M$(p_b + p_m)$ are adjustable

Select windows of $\sqrt{s}$ and M$(p_b + p_m)$

Control the position of TS

Far from threshold……

What is detected, what is TS

(3)

What if TS isn't detected in the future?

TS is cancelled by other mechanisms (not cusp……)

Example (a little idea):

TS ⇒ **One-loop level effect**

Affected by multi-loop?

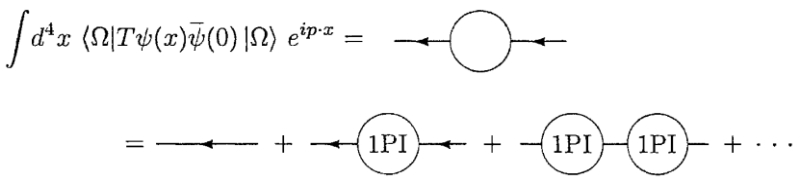

New explanation is need at that time!

A preliminary calculation

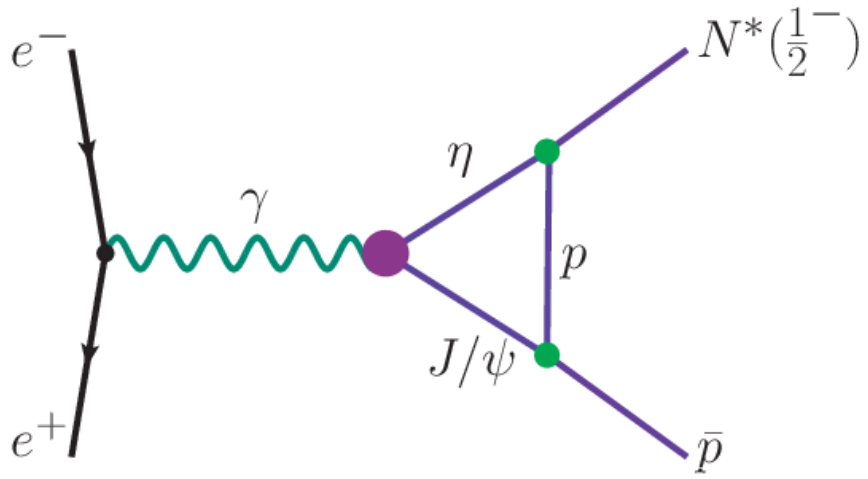

$$M_{\frac{1}{2}^-} = i\int \frac{d^4q}{(2\pi)^4} \frac{\prod_i V_i}{(p_\eta^2 - m_\eta^2 + i m_\eta \Gamma_\eta)(p_{J/\psi}^2 - m_{J/\psi}^2 + i m_{J/\psi}\Gamma_{J/\psi})(q^2 - m_p^2 + i m_p \Gamma_p)} F^2(q, m_p)$$

$$p_\eta = p_{N^*} + q$$
$$p_{J/\psi} = p_{\bar{p}} - q$$

$$F(q, m_p) = \frac{m_p^2 - \Lambda^2}{q^2 - \Lambda^2}$$
$$\Lambda = m_p + \alpha\, \Lambda_{QCD}$$

V_i: Effective Lagrangian

$$\mathcal{L}_{\gamma VP} = g_{\gamma VP}\varepsilon^{\mu\nu\alpha\beta}\partial_\mu A_\nu \partial_\alpha V_\beta,$$
$$\mathcal{L}_{VNN} = -g_{VNN}\bar{N}\gamma_\mu V^\mu N,$$
$$\mathcal{L}_{PNS_{11}} = -g_{PNS_{11}}\bar{N}PS_{11} + h.c.,$$

Numerical result - Preliminary

$\sigma\left[e^+e^- \to \bar{p}N^*\left(\frac{1}{2}\right)^-\right] \sim (\sqrt{s}, m_{N^*})$

Shape: $g_{\gamma VP} = g_{\mathrm{VNN}} = g_{S_{11}NP} = 1$

$\sqrt{s} \in [m_\eta + m_p, 4.7\ GeV]$

$\alpha = 1$

(1). Band-like – TS is a kinematical effect
(2). Cusp near 1.5 GeV – Threshold of ηp
(3). Sharp enhancement near 1.7 GeV – TS

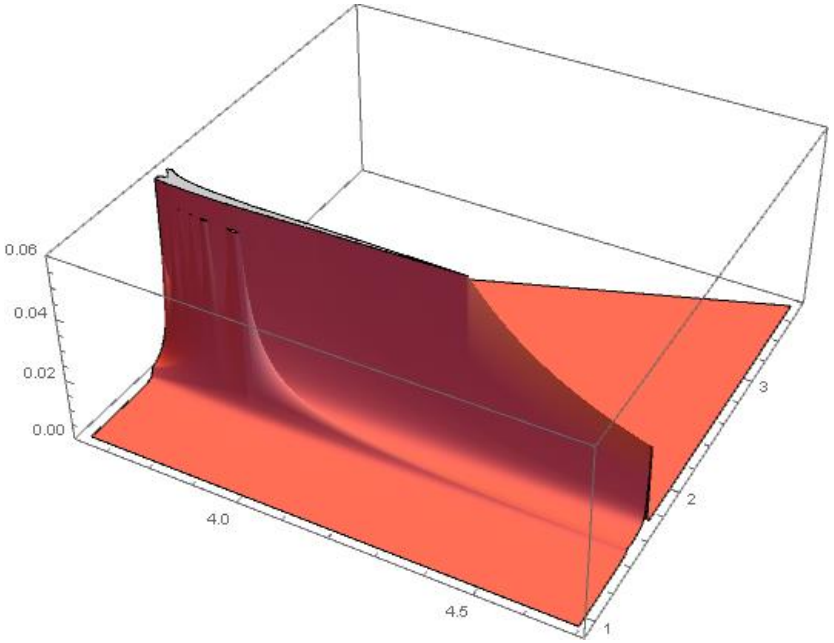

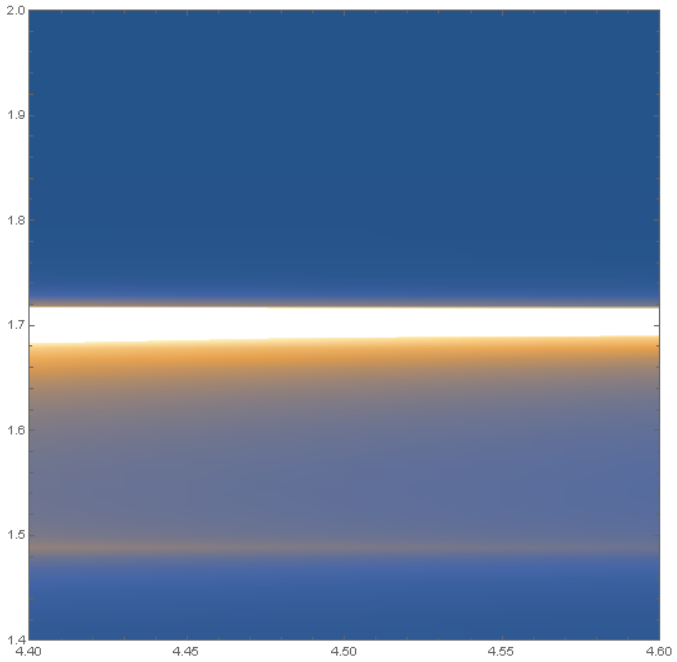

Yellow: Breit-Wigner of $N^*(1535)$
Bump~1.5 GeV: Cusp @ ηp threshold
Bump~1.7 GeV: TS contribution

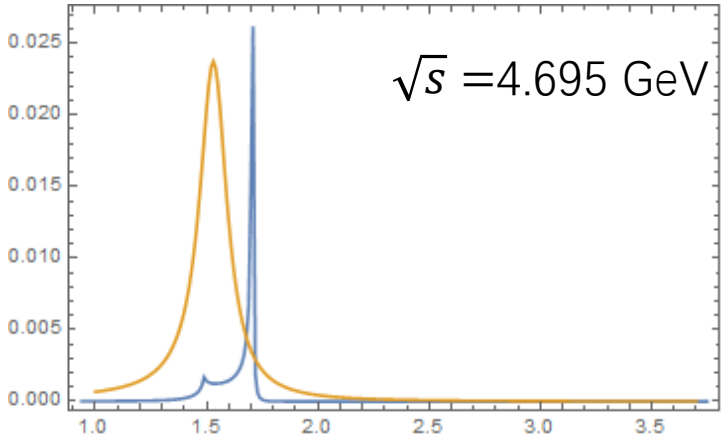

Things to do next

- Coupling constants: cross section, contribution of TS
- Numerical results affected by the form factor
- $N^* \to baryon + meson: N\pi, N\eta, \Delta\pi$ ...
- J^P of N^*: $\frac{1}{2}^+$, $\frac{3}{2}^+$, $\frac{3}{2}^-$, $\frac{5}{2}^-$ ……
- Background, tree-level……
- Golden channel and energy
- ……

Summary

- Detecting TS via $e^+e^- \to \overline{p}(N^* \to baryon + meson)$ process at future STCF experiment.
- A preliminary calculation, e.g., the shape of the cross section of $e^+e^- \to \bar{p}N^*\left(\frac{1}{2}\right)^-$ process, is given.
- Signal of TS is found, which has a very sharp shape.
- Cusp at ηp threshold is given, which is far from TS.
- Many further studies shall be done.

Thank you ~